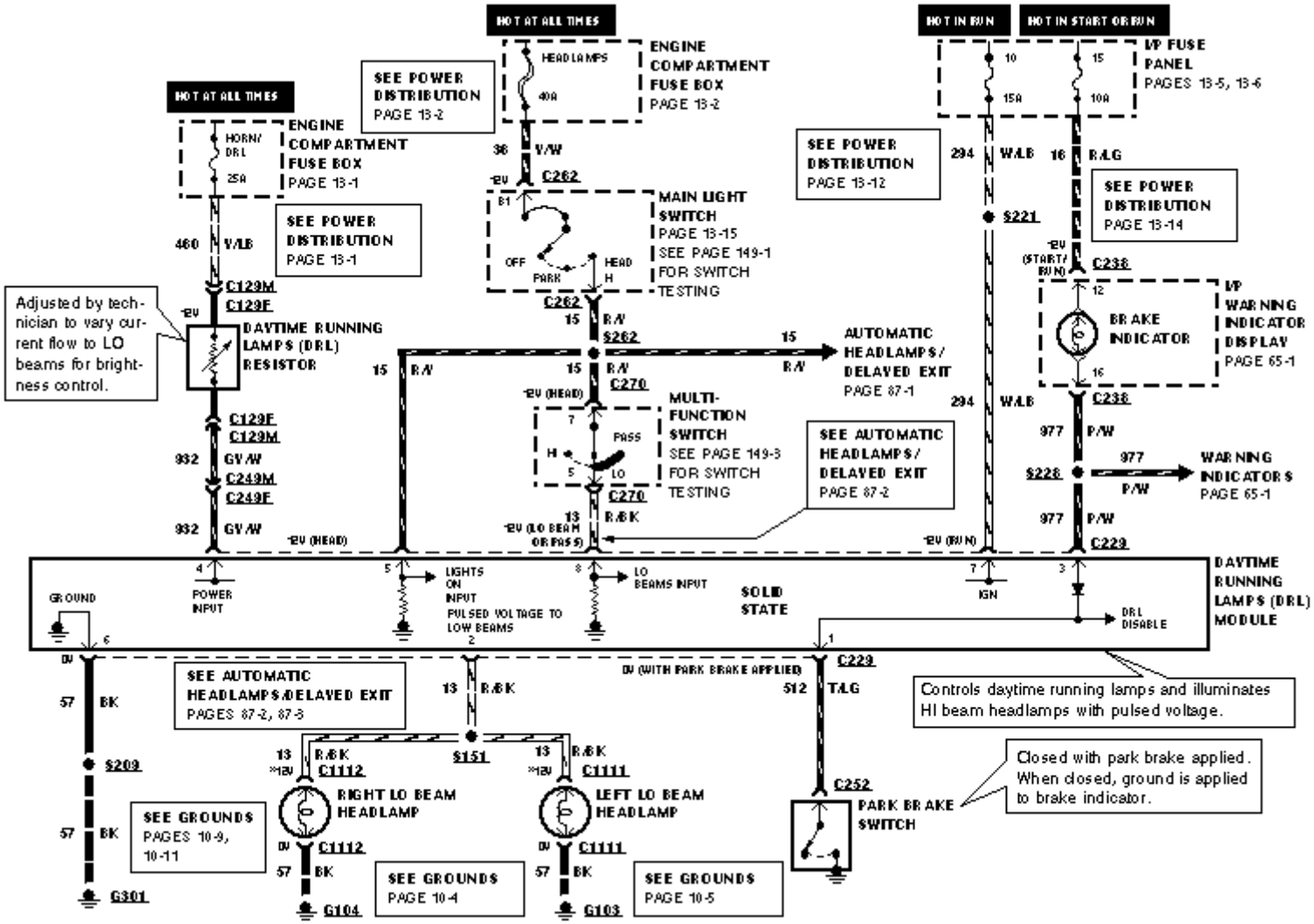097-001 Daytime Running Lamps
(Canadian Vehicles Only)